Chemistry
School Based Assessment

WE *MUST* DO !

What? When? & How?

Leung Siu Wai
swaleung@gmail.com
30th October, 2015

Practical Tasks .....

What Do We Do? List

- Qualitative Analysis (S5 QA)
- Volumetric Analysis (S5 VA)
- Redox Reactions (S5 / S6 EXPT)
- Enthalpy Changes of Combustion of Alcohols (S5 EXPT)
- Concentration Change on Reaction Rate (S5 EXPT)
- Organic Reactions (S6 EXPT)

Practical Tasks .....

What Do We Do?

- Qualitative Analysis (S5 QA) #1
- Volumetric Analysis (S5 VA)
- Redox Reactions (S5 / S6 EXPT)
- Enthalpy Changes of Combustion of Alcohols (S5 EXPT)
- Concentration Change on Reaction Rate (S5 EXPT)
- Organic Reactions (S6 EXPT)

Practical Tasks .....

What Do We Do?

- Qualitative Analysis (S5 QA)
- Volumetric Analysis (S5 VA)
- Redox Reactions (S5 / S6 EXPT)
- Enthalpy Changes of Combustion of Alcohols (S5 EXPT)
- Concentration Change on Reaction Rate (S5 EXPT)
- Organic Reactions (S6 EXPT)

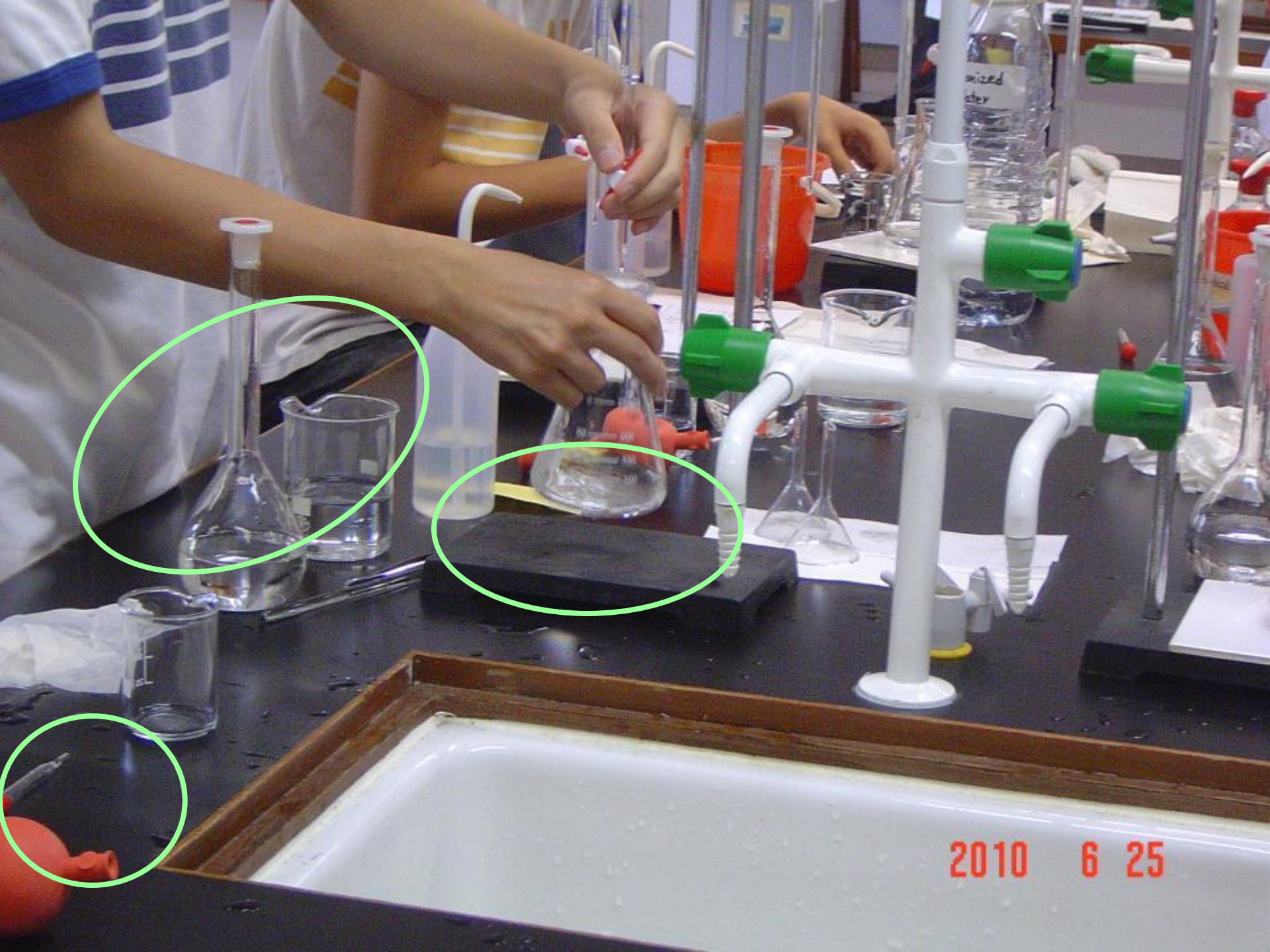
2010 6 25

Volumetric Analysis Training (S4)……

When ?

- S4 Post-examination Activities

Chemistry Supplementary Lesson June – July, 2013

Sun	Mon	Tue	Wed	Thu	Fri	Sat
				20/6 1:00 – 4:00 p.m. S4D Practical Training *Activity 17.1*	21/6 1:00 – 4:00 p.m. S4X Practical Training *Activity 17.1*	22/6
23/6	24/6	25/6	26/6	27/6 3:50 – 5:30 p.m. S4D S4X *Units 19*	28/6 10:00 – 12:00 p.m. 1:00 – 4:00 p.m. S4D S4X *Units 19 +20*	29/6 8:30 – 11:30 a.m. S4X Practical Training 1:00 – 4:00 p.m. S4D Practical Training *Activity 17.3*
30/6	1/7	2/7	3/7	4/7 1:00 – 4:00 p.m. S4D S4X *Unit 20*	5/7 8:30 – 11:30 a.m. S4D S4X *Unit 21*	6/7 8:30 – 10:00 a.m. S4D 10:30 – 12:00 noon S4X *Activity 20.1* *Activity 20.2* *Activity 21.4 T/S*

Volumetric Analysis Training (S4)……

How ?

- Reminders:
  - Preparing Standard Solution #2
  - Process of Titration #3
- List of Apparatus #4
- Word with –ette endings
  - Pipette
  - Burette

  } Must be rinsed with solution
- 50 cm^3 beaker (SB matches with Pipette)
- 100 cm^3 beaker (LB matches with Burette)
- **Students Demonstration**

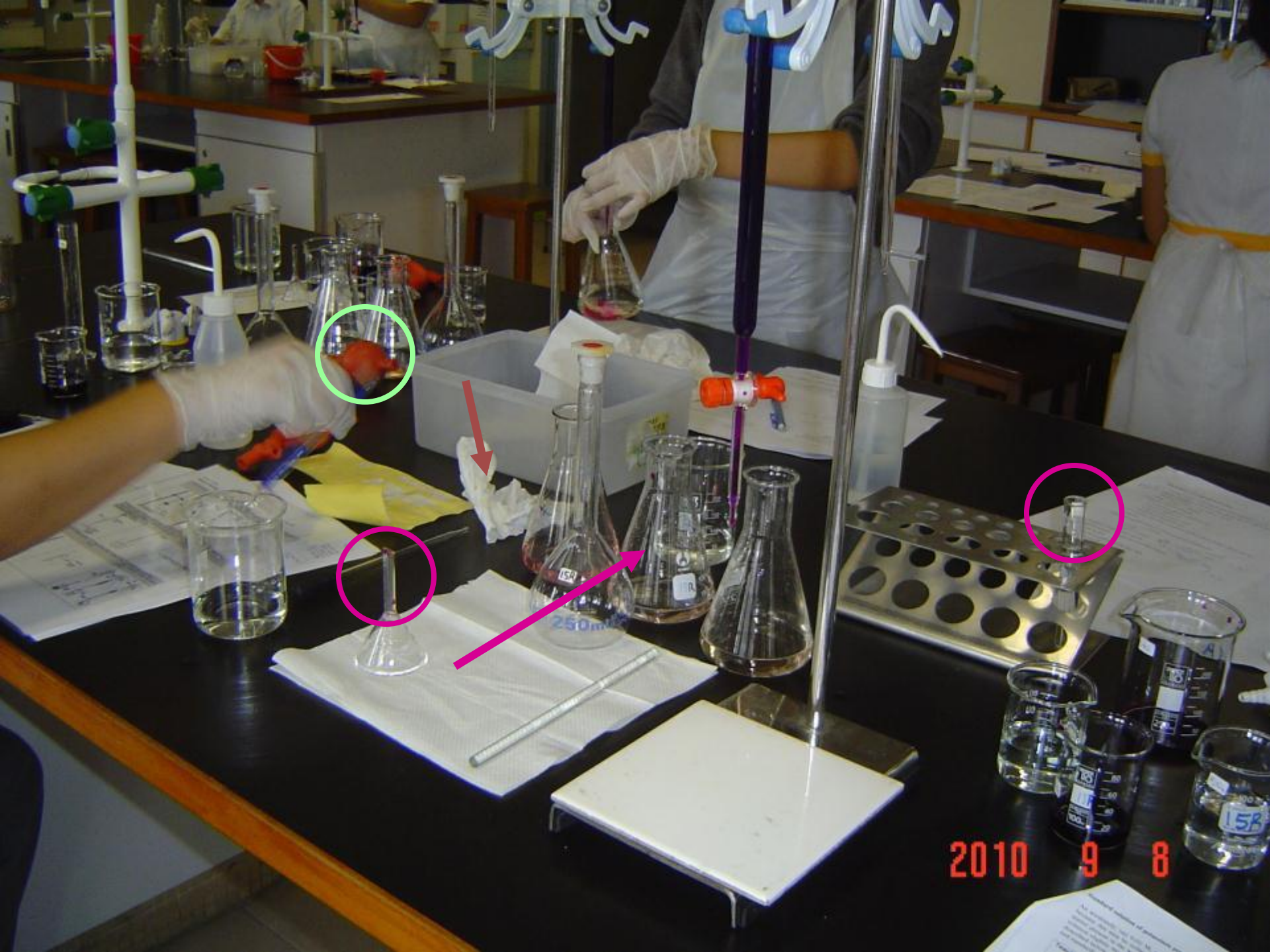
2010 9 8

2010 6 25

Volumetric Analysis Training (S4)……

How?

Determining the Stoichiometry of the Reaction between $I_2(aq)$ and $S_2O_3^{2-}(aq)$

a $Na_2S_2O_3(aq)$ + ***b*** $I_2(aq) \rightarrow$ Products

$I_2(aq) + I^-(aq) \rightleftharpoons I_3^-(aq)$ Brown complex ions

$I_2(aq) + 2S_2O_3^{2-}(aq) \rightarrow 2I^-(aq) + S_4O_6^{2-}(aq)$

tetrathionate ions

- Background information

  Theory of Clock reaction AL Questions
- Worksheet #5
- Manual #6
- Movie Clip ILPAC (4 mins)

Volumetric Analysis SBA (S5 VA)…….

How?

Determine the concentration of iodine solution by a standard sodium thiosulphate solution

$I_2(aq) + I^-(aq) \rightleftharpoons I_3^-(aq)$ **Brown complex ions**

$I_2(aq) + 2S_2O_3^{2-}(aq) \rightarrow 2I^-(aq) + S_4O_6^{2-}(aq)$

tetrathionate ions

- Floor Plan and Schedule #7
- List of Appratus #4
- Mark Scheme #8

Volumetric Analysis SBA (S5 VA)…….

How?

Determine the concentration of potassium permanganate

$$5Fe^{2+}(aq) + MnO_4^-(aq) + 8H^+(aq) \rightarrow 5Fe^{3+}(aq) + Mn^{2+}(aq) + 4H_2O(l)$$

- List of Appratus #9
- Mark Scheme #10

Practical Tasks .....

What Do We Do?

- Qualitative Analysis (S5 QA)
- Volumetric Analysis (S5 VA)
- Redox Reactions (S5 / S6 EXPT)
- Enthalpy Changes of Combustion of Alcohols (S5 EXPT)
- Concentration Change on Reaction Rate (S5 EXPT)
- Organic Reactions (S6 EXPT)

Redox Reactions (S5 / S6 EXPT).....

How?

Investigating Redox Reactions of Chlorine gas

Investigating Redox Reactions of Sulphur Dioxide

List of Apparatus (1)

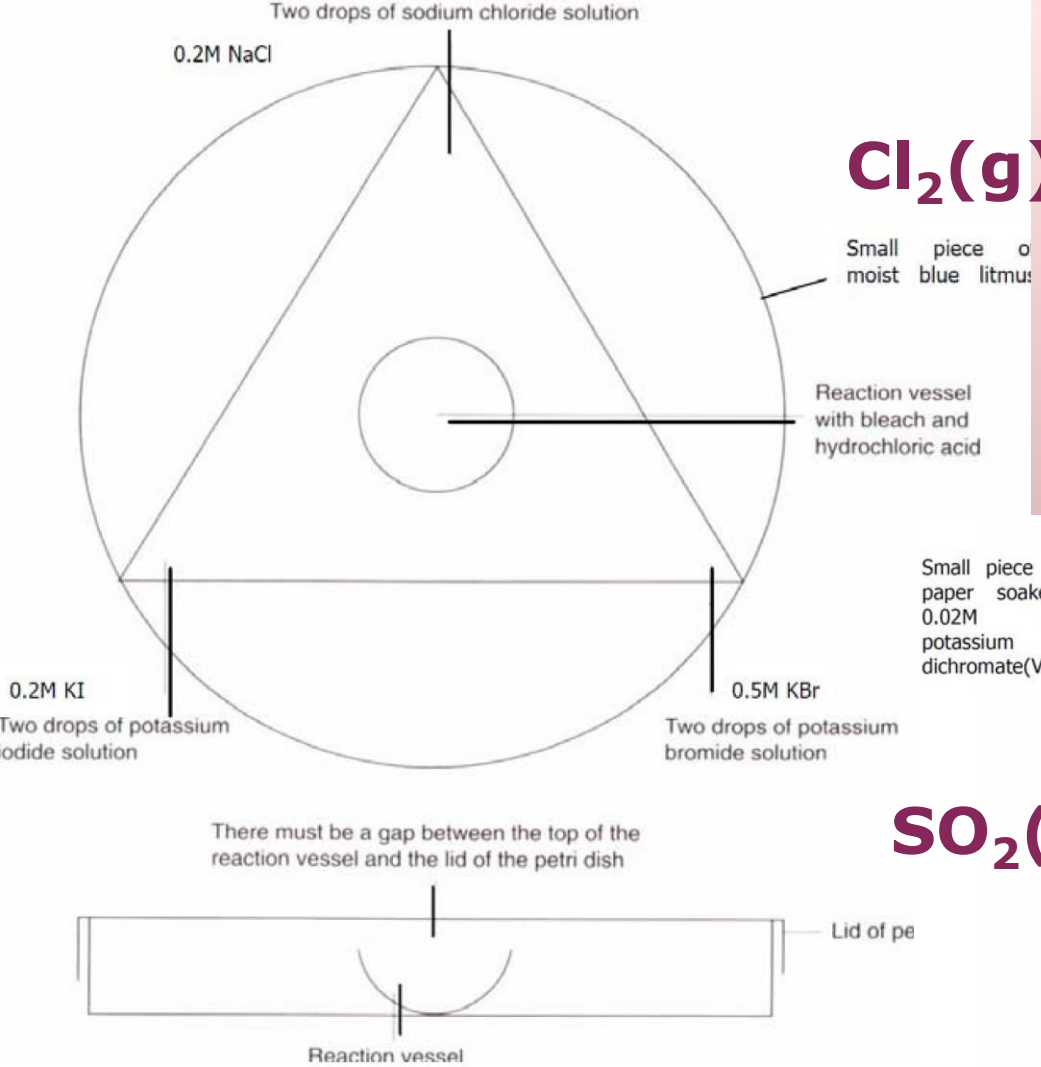

$Cl_2(g)$

List of Apparatus (2)

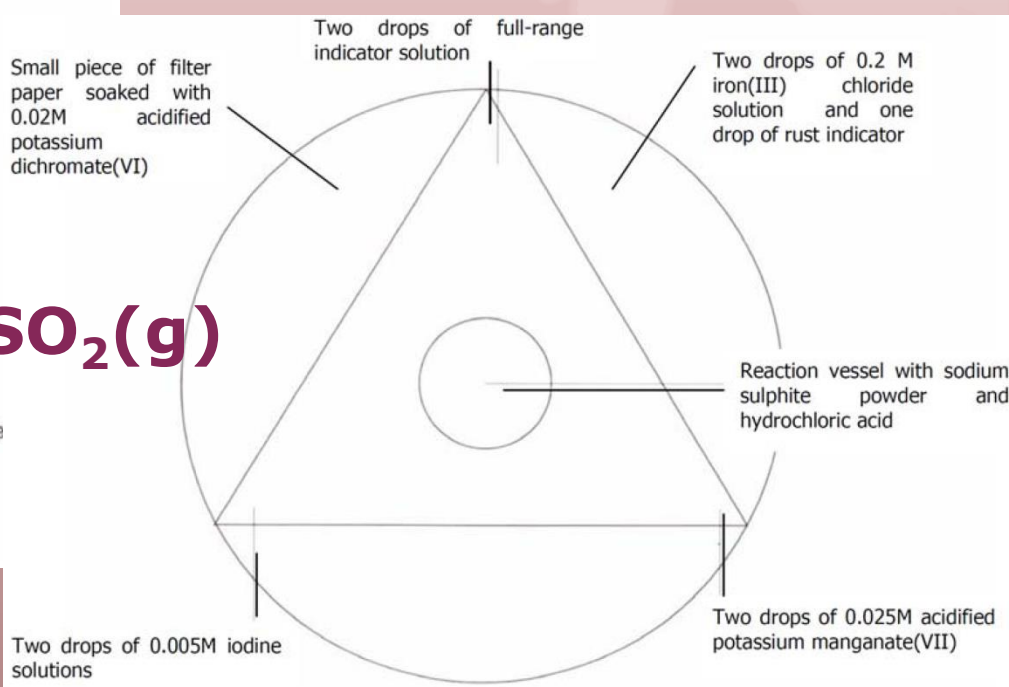

$SO_2(g)$

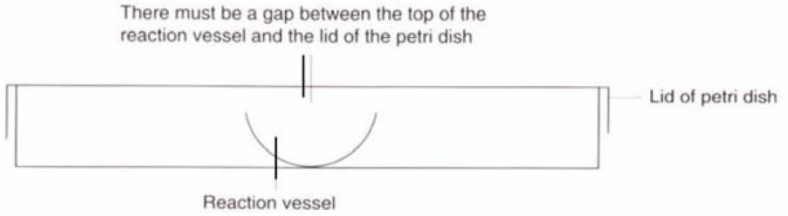

Small piece of filter
soaked with
0.02M
acidifier
potassium
dichromate(VI)
rops of 0.2 M
chloride
and one
indicator
vessel with sodium
powder
and
ric acid
rops of 0.005M iodine
ns
potassium manganate(VII)
2004 6 4

Redox Reactions (S5 / S6 EXPT).....

How?

Investigating Redox Reactions of Chlorine gas

Investigating Redox Reactions of Sulphur Dioxide

- Mark Scheme (Chlorine gas) #11
- Mark Scheme (Sulphur dioxide gas) #12

Practical Tasks .....

What Do We Do?

- Qualitative Analysis (S5 QA)
- Volumetric Analysis (S5 VA)
- Redox Reactions (S5 / S6 EXPT)
- Enthalpy Changes of Combustion of Alcohols (S5 EXPT)
- Concentration Change on Reaction Rate (S5 EXPT)
- Organic Reactions (S6 EXPT)

Enthalpy Changes of Combustion of Alcohols

Left	1a Methanol	2a Ethanol	3a Propan-1-ol	4a Butan-1-ol	5a Methanol
Molar mass (g mol–1)	32	46	60	74	32
Initial mass of spirit lamp (g)	**247.32**	**232.45**	**281.53**	**267.30**	**171.08**
Final mass of spirit lamp (g)	**245.41**	**231.35**	**280.30**	**266.00**	**169.36**
Mass of alcohol burnt (g)	1.910	1.100	1.230	1.300	1.720
Ti = Initial temperature (°C)	**25.1**	**25.0**	**25.1**	**25.0**	**23.6**
Tf = Final temperature (°C)	**47.8**	**45.0**	**45.3**	**45.2**	**46.6**
Temperature change ΔT (°C)	22.700	20.000	20.200	20.200	23.000
Amount of heat released (J) = 200 g x 4.18 J g–1 K–1 x ΔT K	18977.200	16720.000	16887.200	16887.200	19228.000
Amount of alcohol burnt (mol)	0.060	0.024	0.020	0.018	0.054
Enthalpy change of combustion (kJ mol–1)	317.943	699.200	823.766	961.271	357.730

Right	1b Methanol	2b Ethanol	3b Propan-1-ol	4b Butan-1-ol	5b Methanol
Molar mass (g mol–1)	32	46	60	74	32
Initial mass of spirit lamp (g)	**242.24**	**168.95**	**227.08**	**243.46**	**253.00**
Final mass of spirit lamp (g)	**240.31**	**167.54**	**225.60**	**242.53**	**251.31**
Mass of alcohol burnt (g)	1.930	1.410	1.480	0.930	1.690
Ti = Initial temperature (°C)	**25.3**	**25.6**	**23.4**	**24.8**	**26.3**
Tf = Final temperature (°C)	**46.8**	**45.6**	**43.3**	**46.5**	**47.7**
Temperature change ΔT (°C)	21.500	20.000	19.900	21.700	21.400
Amount of heat released (J) = 200 g x 4.18 J g–1 K–1 x ΔT K	17974.000	16720.000	16636.400	18141.200	17890.400
Amount of alcohol burnt (mol)	0.060	0.031	0.025	0.013	0.053
Enthalpy change of combustion (kJ mol–1)	298.015	545.475	674.449	1443.493	338.753

Enthalpy Changes of Combustion of Alcohols

Carbon number in each molecule	1	2	3	4
Average Values of enthalpy change of combustion	328.110	622.338	749.107	1202.382

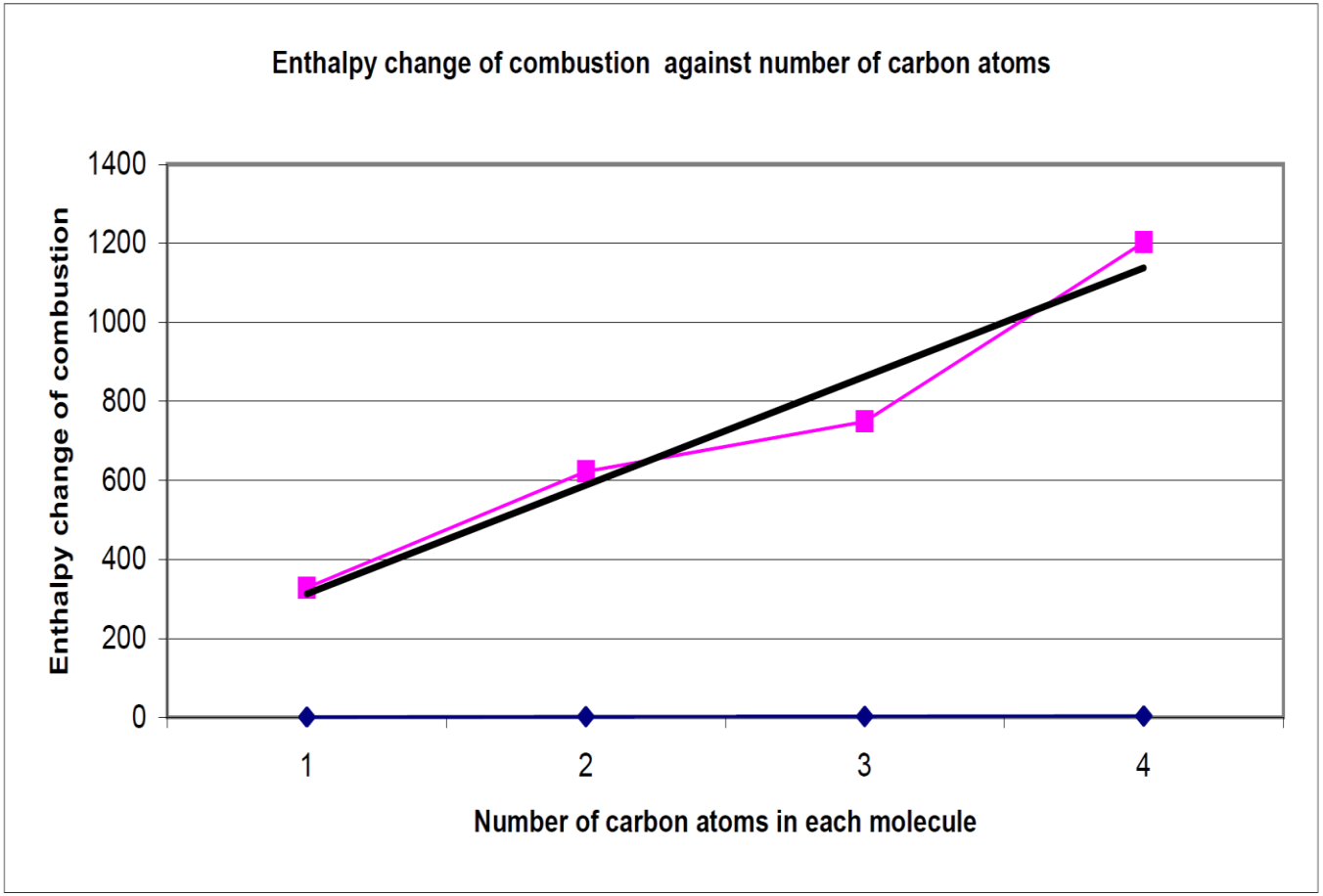

Enthalpy Changes of Combustion of Alcohols (S5 EXPT) .....

How?

- Written Practical Assessment
- Question Paper #13
- Mark Scheme #14

Practical Tasks .....

What Do We Do?

- Qualitative Analysis (S5 QA)
- Volumetric Analysis (S5 VA)
- Redox Reactions (S5 / S6 EXPT)
- Enthalpy Changes of Combustion of Alcohols (S5 EXPT)
- Concentration Change on Reaction Rate (S5 EXPT)
- Organic Reactions (S6 EXPT)

Investigating Effect of Concentration on Reaction Rate

$S_2O_3^{2-}(aq) + 2H^+(aq) \rightarrow SO_2(g) + S(s) + H_2O(l)$

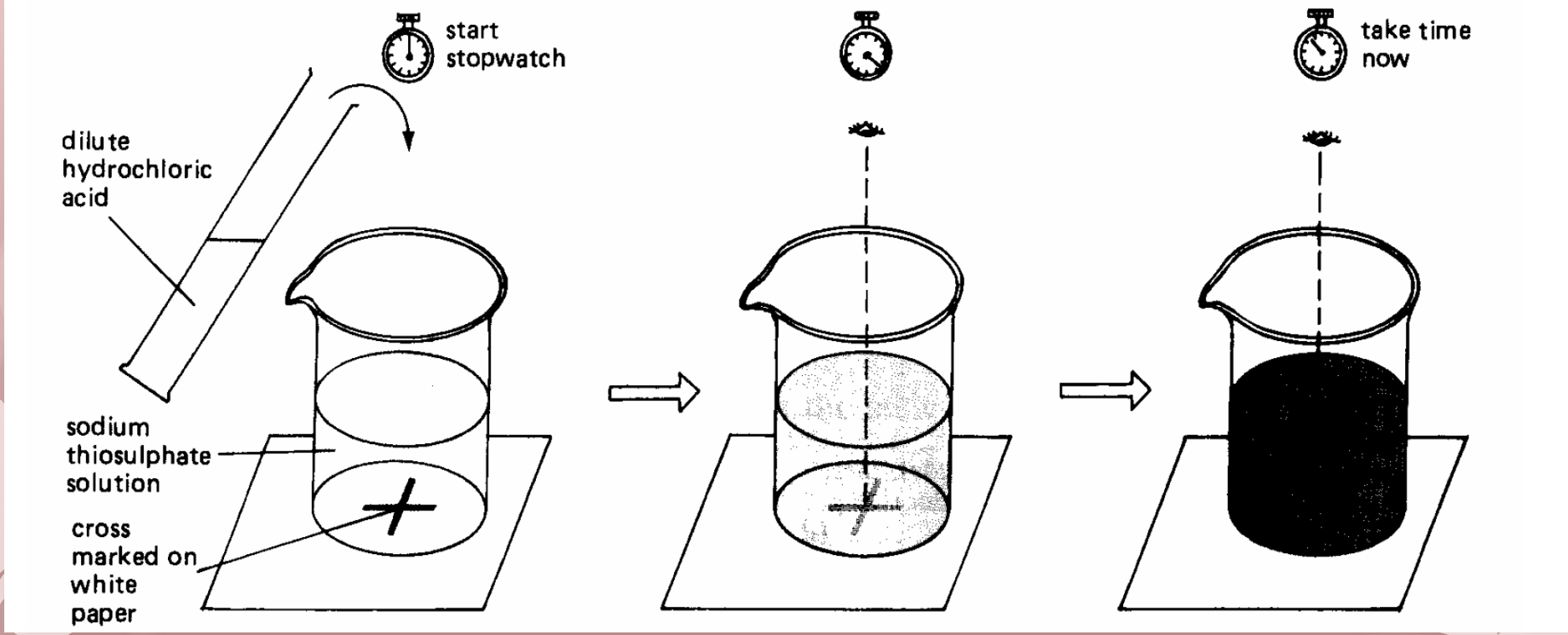

Investigating Effect of Concentration on Reaction Rate

$$S_2O_3^{2-}(aq) + 2H^+(aq) \rightarrow SO_2(g) + S(s) + H_2O(l)$$

Temperature of reaction mixture = _____ °C

Bench Number	Volume of $Na_2S_2O_3(aq)$ / cm^3	Volume of water / cm^3	Volume of HCl(aq) / cm^3	Time (t) for cross to be just 'blotted out' / s	1/t / 10^{-3} s^{-1}
1	50.0	0.0	5.0		
2	40.0	10.0	5.0		
3	30.0	20.0	5.0		
4	20.0	30.0	5.0		
5	10.0	40.0	5.0		
6	0.0	50.0	5.0		

Investigating Effect of Temperature on Reaction Rate

$S_2O_3^{2-}(aq) + 2H^+(aq) \rightarrow SO_2(g) + S(s) + H_2O(l)$

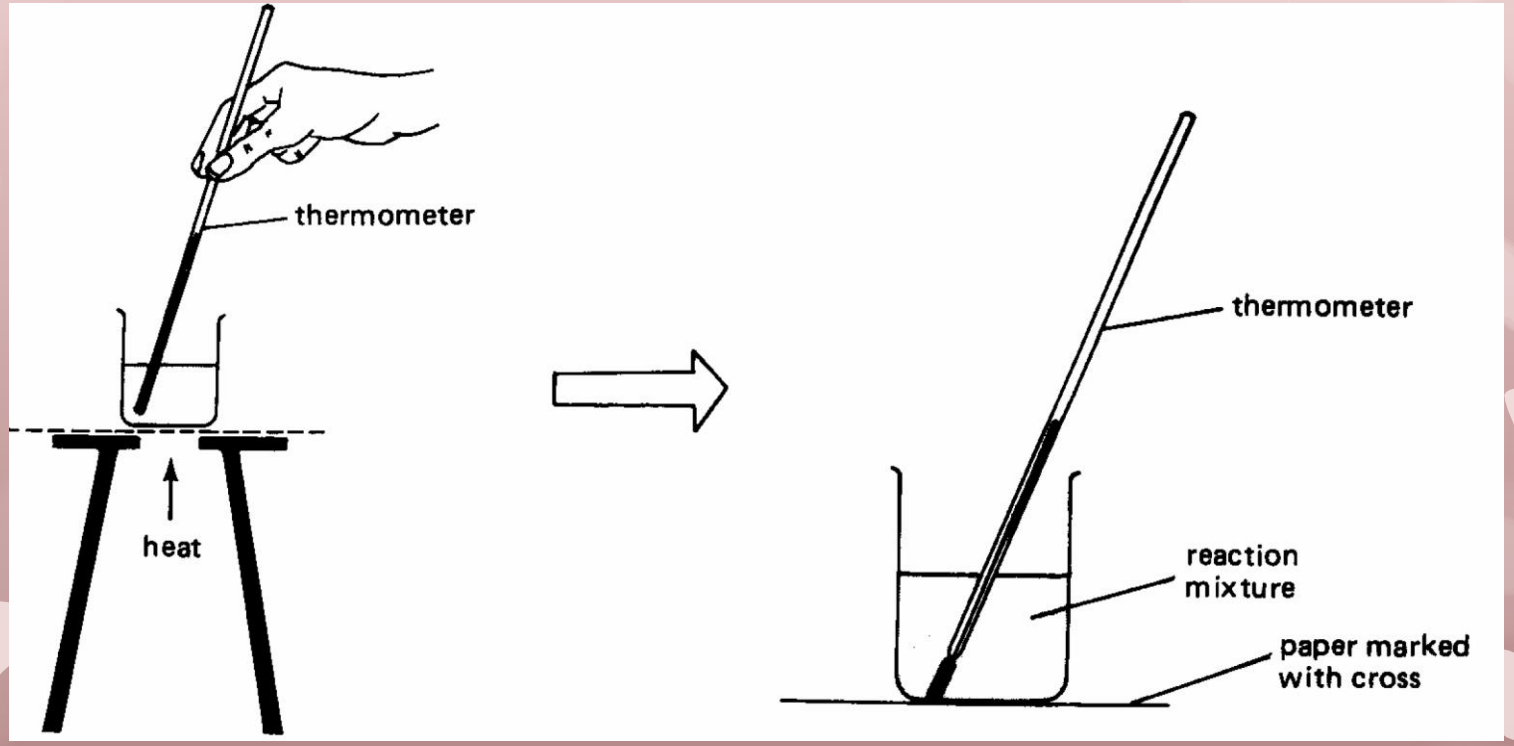

Investigating Effect of Temperature on Reaction Rate

$S_2O_3^{2-}(aq) + 2H^+(aq) \rightarrow SO_2(g) + S(s) + H_2O(l)$

Bench Number	Temperature of reaction mixture		Time (t) for cross to be just 'blotted out' / s	1/t / 10^{-3} s^{-1}
	Suggested temperature	Actual temperature / °C		
1	Room temperature			
2	35°C			
3	45°C			
4	55°C			
5	60°C			
6	65°C			

Concentration Change on Reaction Rate (S5 EXPT).....

How?

- Written Practical Assessment
- Question Paper #15
- Mark Scheme #16

Practical Tasks .....

What Do We Do?

- Qualitative Analysis (S5 QA)
- Volumetric Analysis (S5 VA)
- Redox Reactions (S5 / S6 EXPT)
- Enthalpy Changes of Combustion of Alcohols (S5 EXPT)
- Concentration Change on Reaction Rate (S5 EXPT)
- Organic Reactions (S6 EXPT)

Practical Tasks .....

What ? *When* ? *How* ?

- Qualitative Analysis (S5 QA)
- Volumetric Analysis (S5 VA)
- Redox Reactions (S5 / S6 EXPT)
- Enthalpy Changes of Combustion of Alcohols (S5 EXPT)
- Concentration Change on Reaction Rate (S5 EXPT)
- Organic Reactions (S6 EXPT)

Practical Tasks .....

Why Do We Do?

I hear …. I forget.
I see …. I remember.
I do …. I understand.

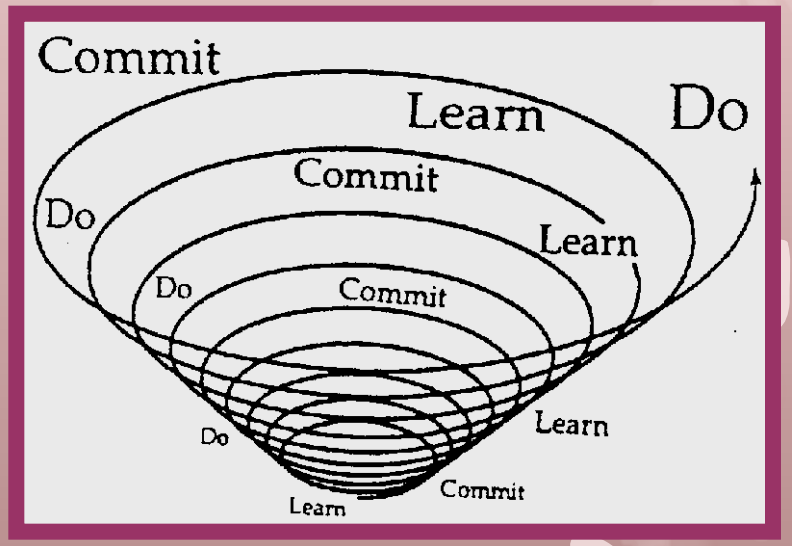

Thank You !

Leung Siu-wai Anita
swaleung@gmail.com

Spare Time Left Extended Elaboration

Chemistry Experimental Techniques (化學實驗技巧)

http://minisite.proj.hkedcity.net/chemtech/eng/index.html

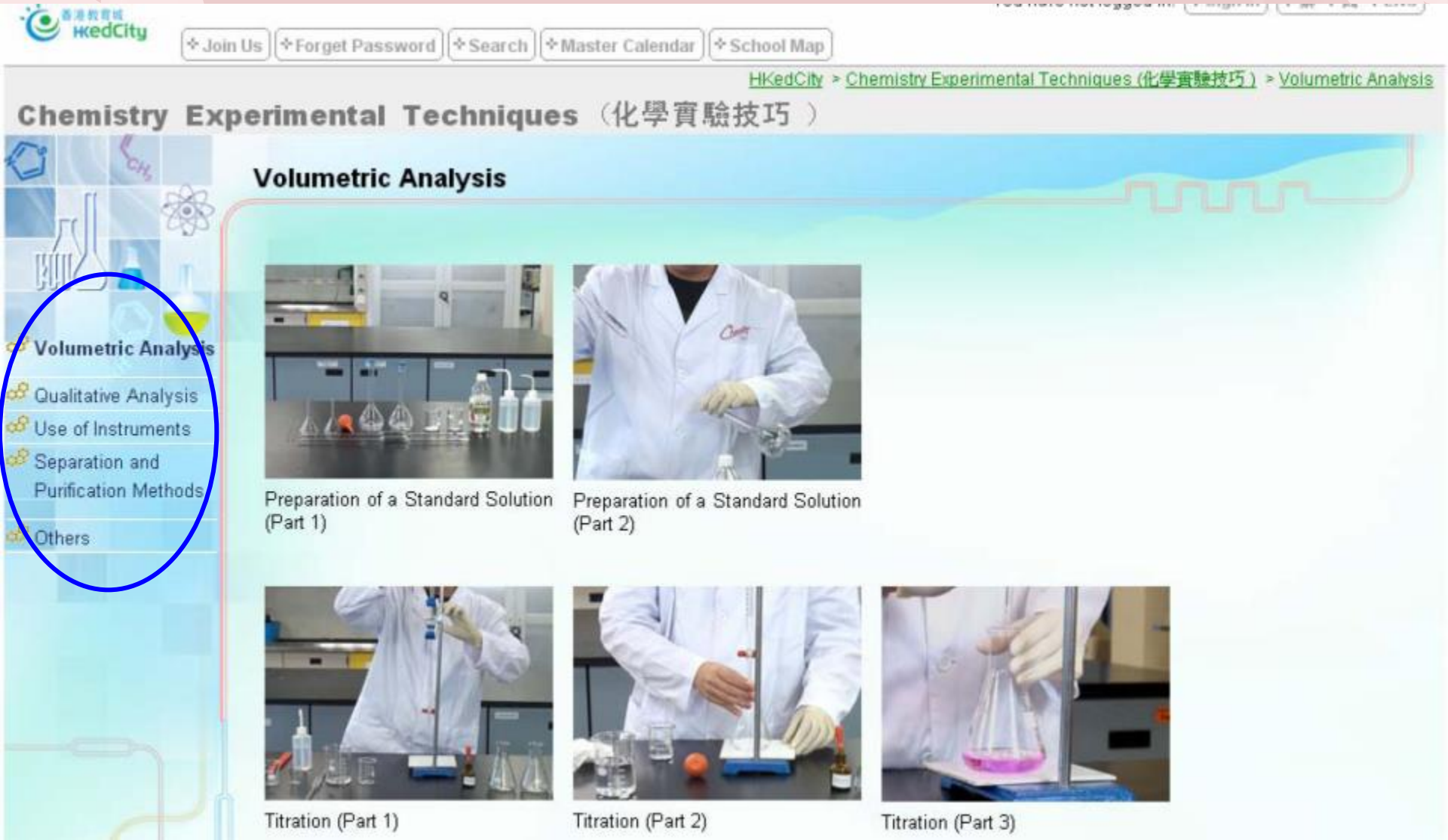

More Practical Tasks on Volumetric Analysis .....

When Do We Do? *How* Do We Do?

- Determining the concentration of chloride ions in a sea water
- Determining the sodium hypochlorite content in a bleach

Activity 55.6 – Determining the sodium hypochlorite content in a bleach

Score	1	2	3	4	5
	Very Poor	Unsatisfactory	Satisfactory	Very Good	Excellent

	Safety	Effectiveness	Efficiency	Tidiness	Accuracy	
1	GROUP 1					
2	4	4	4	5		
3	4	3	3	4		
4	5	4	4	4		
5	4	3	4	4		
6						
Teacher	5	3	4	4	4	
	4.4	3.4	3.8	4.2	4	19.8

	Safety	Effectiveness	Efficiency	Tidiness	Accuracy	
1	5	4	4	5		
2	GROUP 2					
3	4	3	3	4		
4	4	5	4	4		
5	4	4	4	5		
6						
Teacher	5	4	4	4	2	
	3.4	3.2	3	3.4	2	15

	Safety	Effectiveness	Efficiency	Tidiness	Accuracy	
1	5	4	5	5		
2	4	4	4	4		
3	GROUP 3					
4	4	4	4	5		
5	4	4	4	4		
6						
Teacher	5	4	5	4	4	
	3.4	3.2	3.4	3.4	4	17.4

Chemistry Experimental Techniques (化學實驗技巧)

http://minisite.proj.hkedcity.net/chemtech/eng/index.html

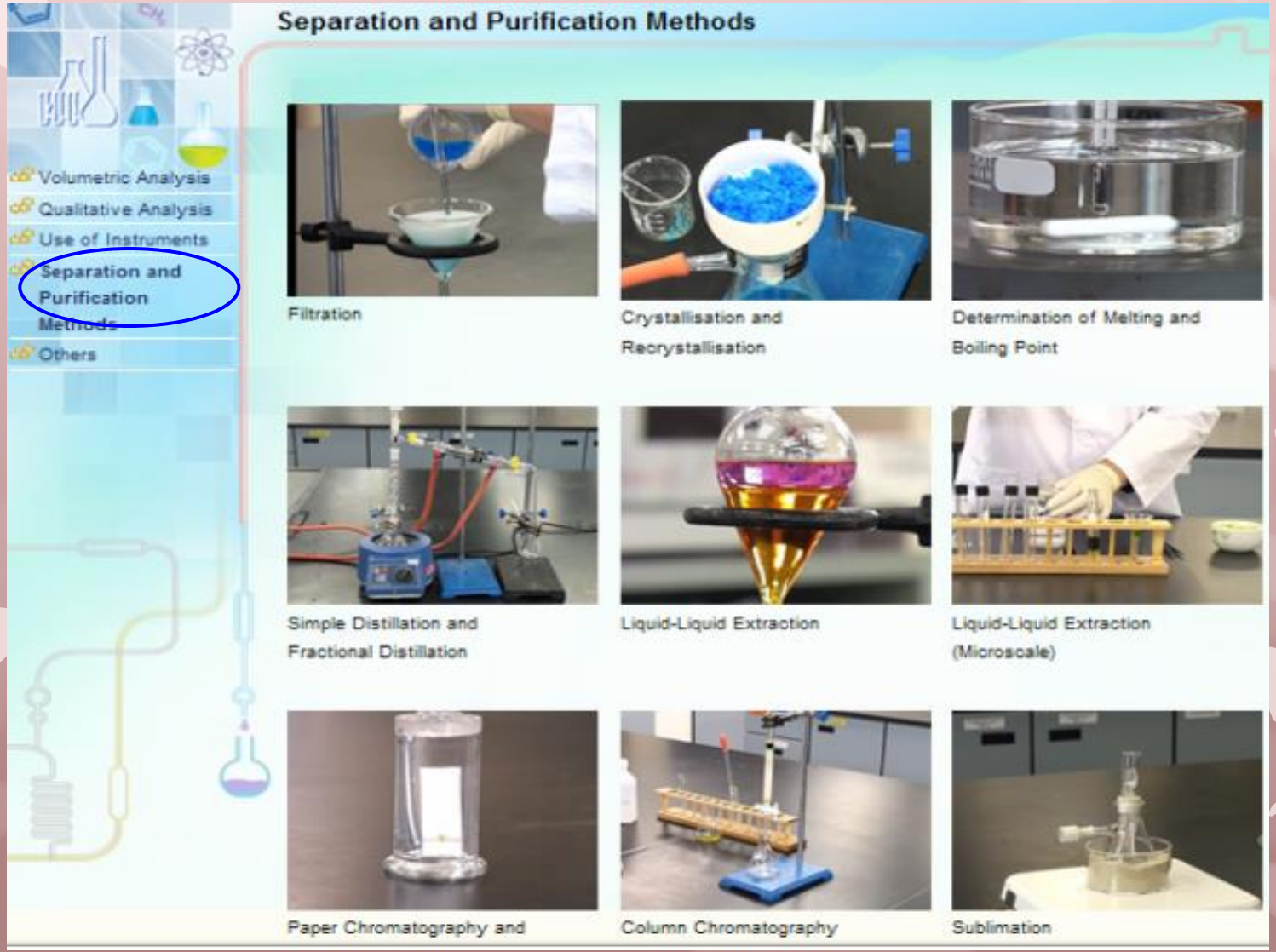

Organic Synthesis

- Synthesis of 3-Methyl-1-butyl ethanoate (Fragrance of Banana)
- Oxidizing ethanol to ethanoic acid and testing the ethanoic acid produced
- Preparing and purifying 2-chloro-2-methylpropane

Synthesis of 3-Methyl-1-butyl ethanoate Fragrance of Banana

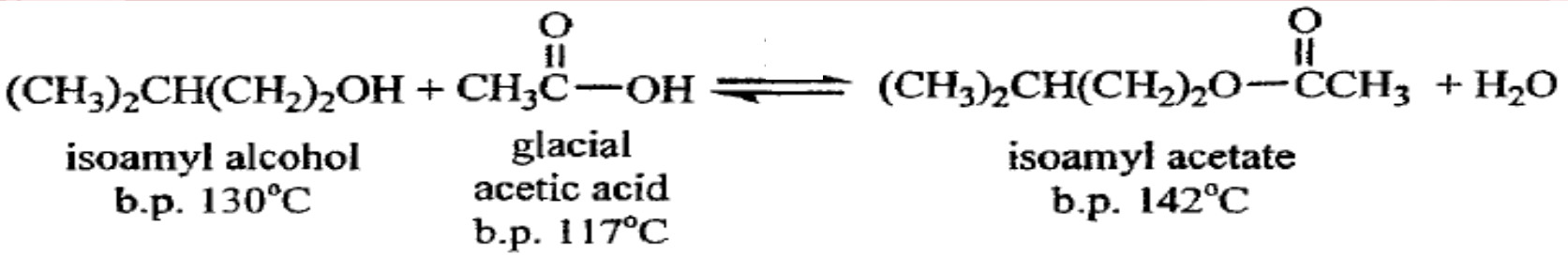

Thank You !

Leung Siu-wai Anita
swaleung@gmail.com